Please give us a chance to make it right and do better !

Contact our friendly customer service department for help first.
Replacements for missing or damaged parts will be shipped ASAP !

US office: Fontana **UK** office: Ipswich **AU** office: Truganina
DE office: Hamburg **FR** office: Saint Vigor d'Ymonville **PL** office: Gdańsk

COSTWAY®

Contact Us!

Do NOT return this item.
Contact our friendly customer service department for help first.

US:cs.us@costway.com
UK:cs.uk@costway.com
AU:cs.au@costway.com

COSTWAY®

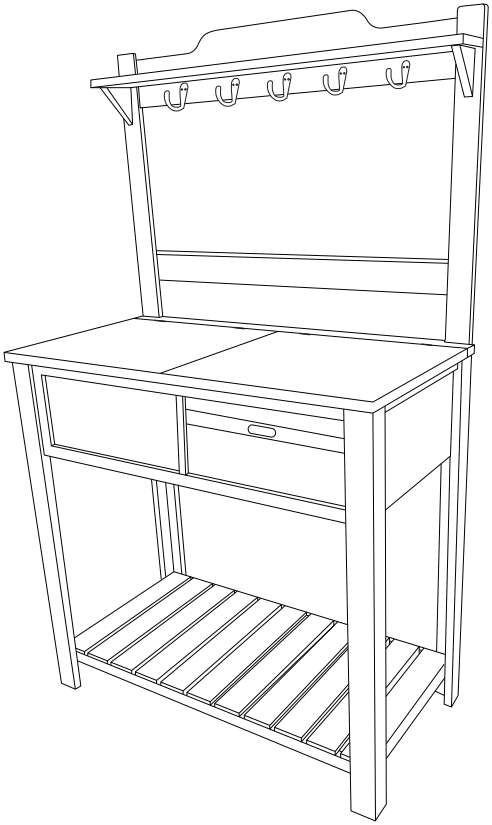

USER'S MANUAL

Raised Garden Bed
TH10010

THIS INSTRUCTION BOOKLET CONTAINS **IMPORTANT** SAFETY INFORMATION. PLEASE READ AND KEEP FOR FUTURE REFERENCE.

COSTWAY

Before You Start

- Please read all instructions carefully.
- Retain instructions for future reference.
- Separate and count all parts and hardware.
- Read through each step carefully and follow the proper order.
- We recommend that, where possible, all items are assembled near to the area in which they will be placed in use, to avoid moving the product unnecessarily once assembled.
- Always place the product on a flat, steady and stable surface.
- Keep all small parts and packaging materials for this product away from babies and children as they potentially pose a serious choking hazard.

Ⓐ **x 1 Piece**

Ⓐ1 **x 1 Piece**

Ⓑ **x 1 Piece**

Ⓑ1 **x 1 Piece**

Ⓒ **x 1 Piece**

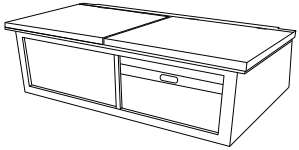

Ⓓ **x 1 Piece**

Ⓔ **x 1 Pieces**

Ⓔ1 **x 1 Pieces**

Ⓕ **x 1 Pieces**

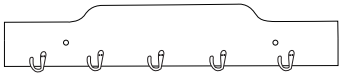

Ⓖ **x 1 Pieces**

Ⓗ **x 2 Piece**

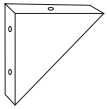

Ⓘ **x 1 Piece**

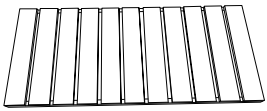

① **M4 x30mm -32Pieces**

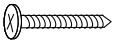

② **M4 x20mm -4Pieces**

③

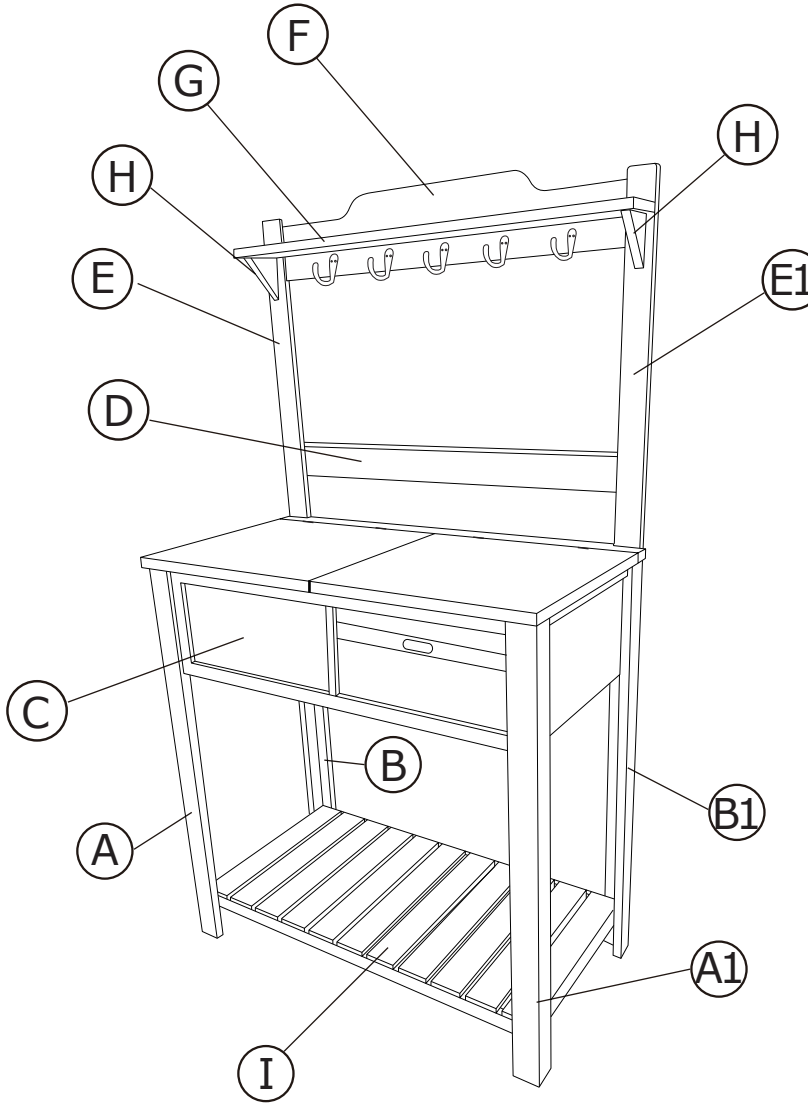
F
G
H
H
E
E1
D
C
B
B1
A
A1
I

Step 1

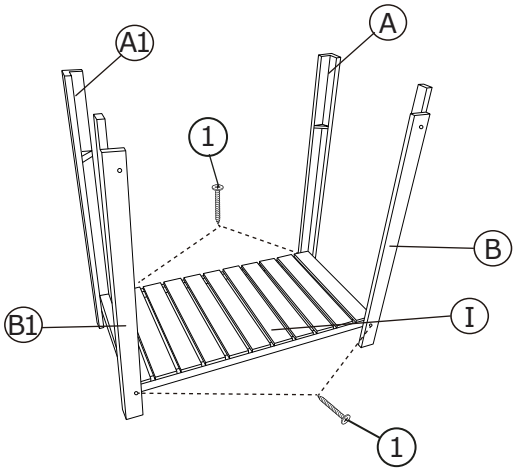

① **M4 x30mm - 4Pieces**

Step 2

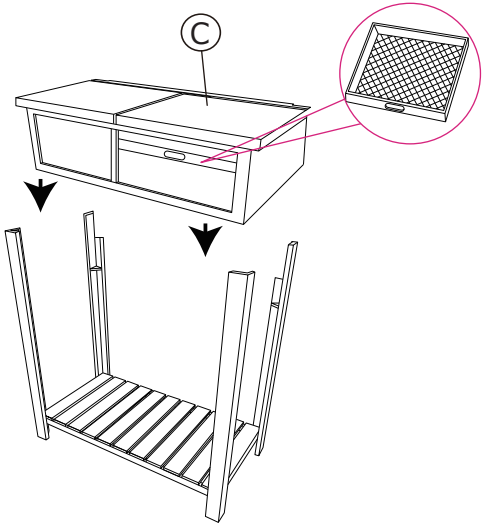

Step 3

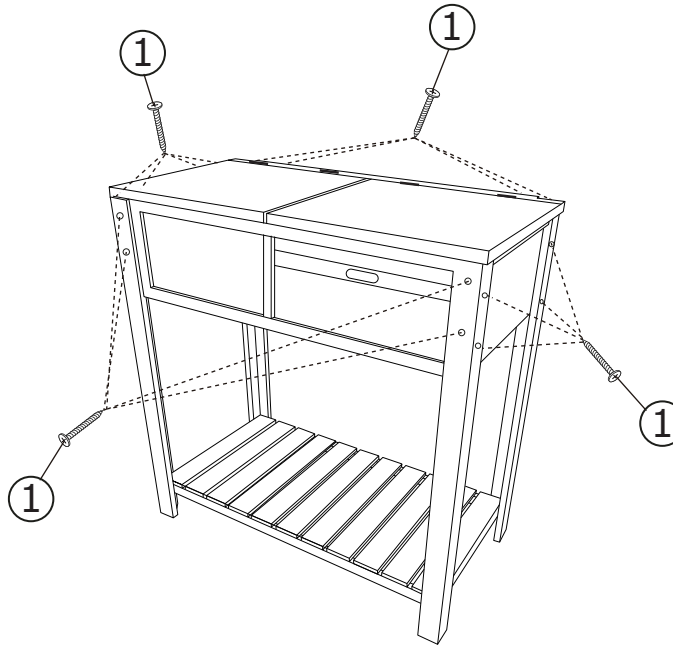

① **M4 x30mm - 16Pieces**

Step 4

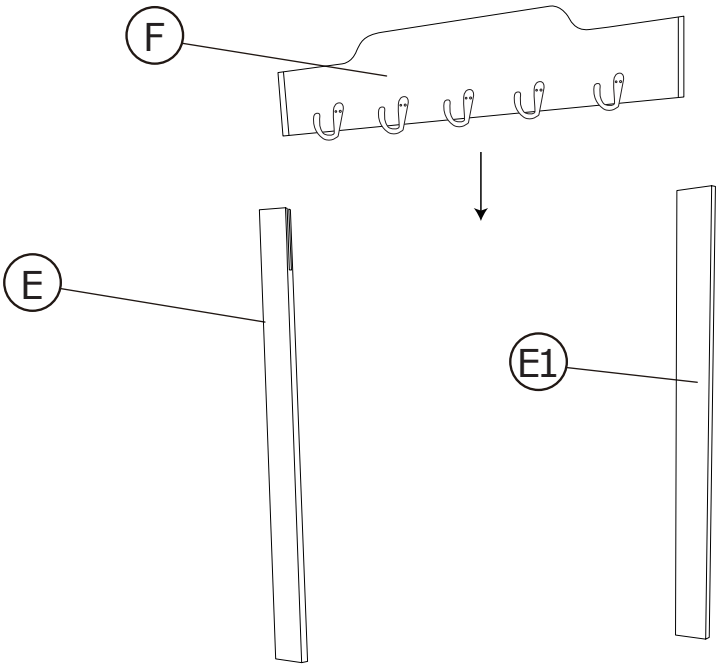

Step 5

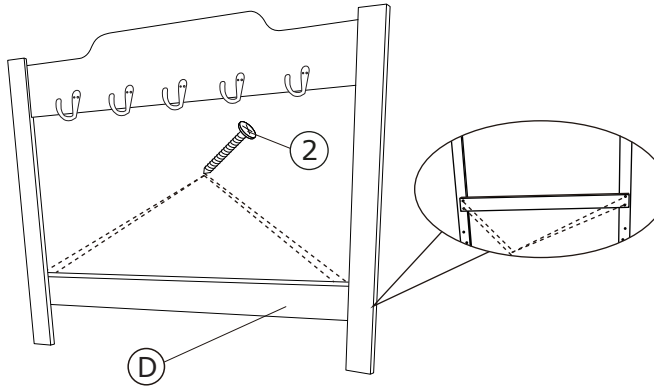

② **M4 x20mm - 4Pieces**

Step 6

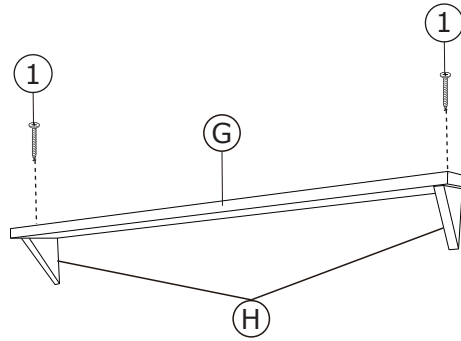

① **M4 x30mm - 2Pieces**

Step 7

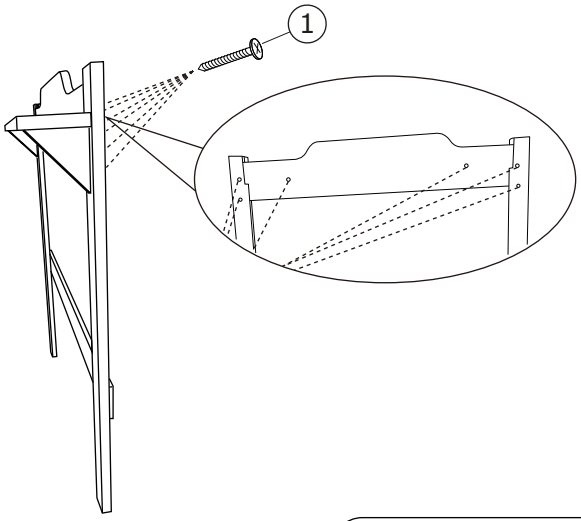

① **M4 x30mm - 6Pieces**

Step 8

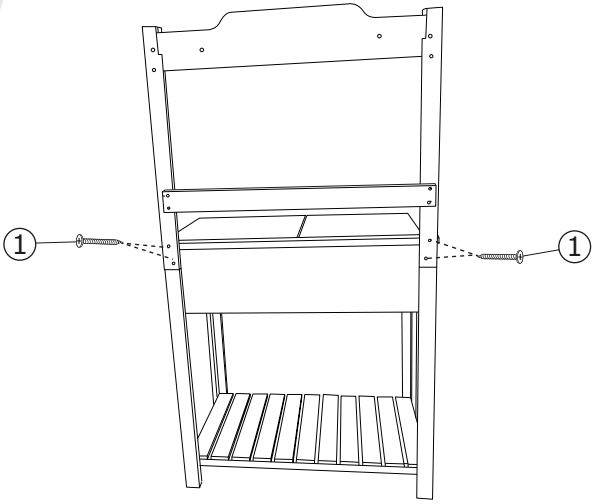

① **M4 x30mm - 4Pieces**

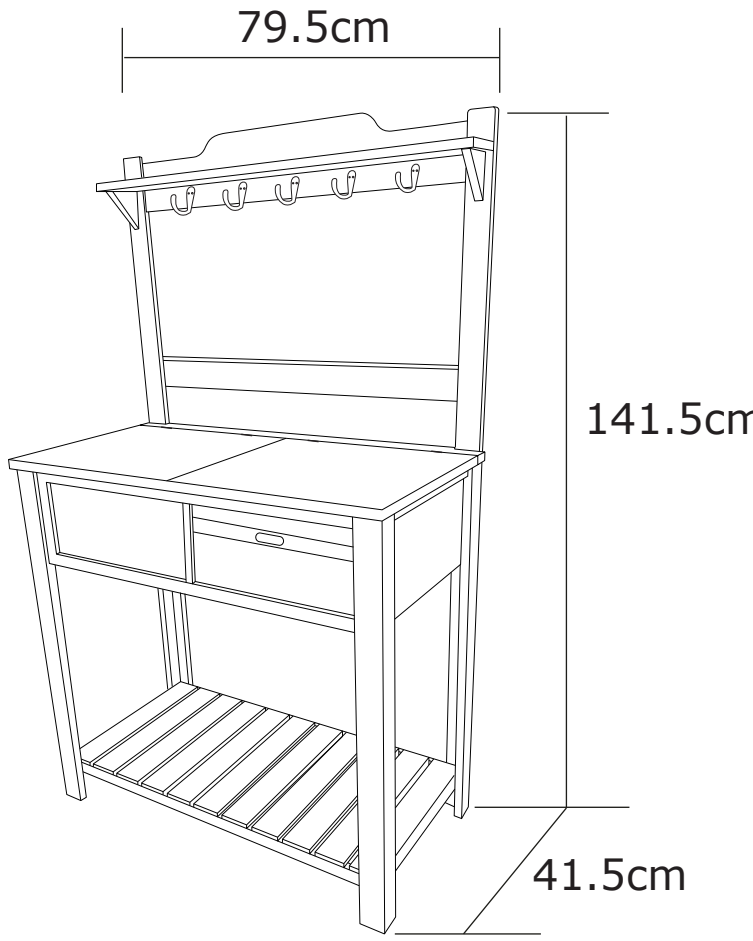
79.5cm
141.5cm
41.5cm